REAR LAMPS (CONT)

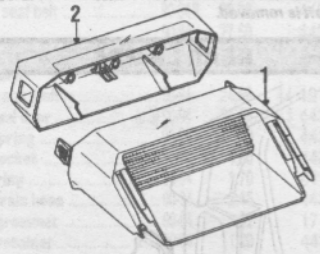

HIGH MOUNT LAMPS

611	1 Lens & housing	90-94	46.95	0.5	443 945 122
612	2 Socket panel	90-94	25.15		443 945 121
613	Bulb	90-94	1.70		N 017 753 2

REAR BUMPER

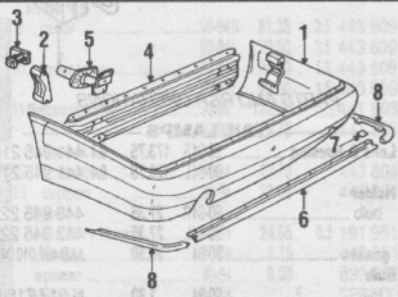

REFINISHING NOTES

662	Refn edges	90-94	(p.5)

OVERHAUL OPERATIONS

666	O/H bumper assy	90-94	2.0

R&I OPERATIONS

665	R&I bumper assy	90-94	1.0

PARTS AND R&R OPERATIONS

REAR BUMPER

667	1 Bumper cover	(p2.8)	90-94	627.00 #	2.0	441 807 301 DGRU
	bracket					
668	2 front		90-94	8.50		441 807 253 B
669	3 lower		90-94	1.40		441 807 335
670	4 Face bar		90-94	400.35 #	2.0	441 807 305 C
	Filler					
672	6 center	(p.7)	90-94	124.15 ¶	0.4	441 853 071 2ZZ
673	7 cap		90-94R	16.05 ¶		441 853 076
674			90-94L	16.05 ¶		441 853 075
675	8 side	(p.4)	90-94R	79.65 ¶	0.3	441 853 074 2ZZ
676		(p.4)	90-94L	79.65 ¶	0.3	441 853 073 2ZZ
671	5 Energy absorber		90-94B	225.50 ¶	0.3	441 807 377 E

 # Time is for overhaul.
¶ After bumper is removed.

INTERIOR TRIM

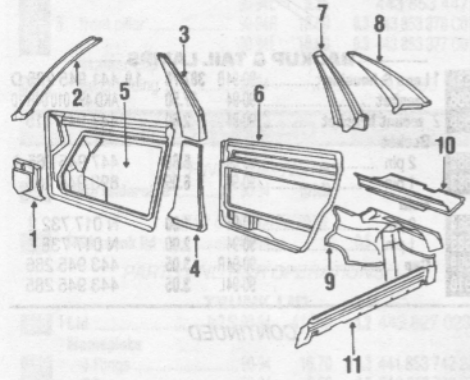

INTERIOR TRIM

Part numbers and prices may vary due to types and colors. The information listed below is for estimating, purposes only. For actual prices and ordering parts, consult your local dealer. On those panels where refinishing is necessary, estimate paint time accordingly.

ADD IF REQUIRED

1446	headliner R&I	90-94		1.5	

PARTS AND R&R OPERATIONS

	Pillar trim				
	front				
677	1 lower	90-91R	94.55	0.3	441 867 266 3VT
678		90-91L	168.70	0.3	441 867 265 A3VT
1260		92-94R	213.85	0.3	441 867 270 B7XY
1261		92-94L	168.70	0.3	441 867 265 C7XY
679	2 upper	90-94R	50.05	0.3	447 867 232 A1KY
680		90-94L	50.05	0.3	441 867 231 1KY
	center				
681	3 upper	90-94R	100.55	0.3	443 867 240 J1KY
682		90-94L	100.55	0.3	443 867 239 J1KY
683	4 lower	90-91R	100.55	0.4	443 867 244 A1KY
684		90-91L	100.55	0.4	443 867 243 A1KY
1262		92-94R	112.20	0.4	441 867 244 8DY
1263		92-94L	112.20	0.4	441 867 243 8DY
	Door trim panel				
	5 front				
685	cloth	90-94R	556.00	1.0	441 867 022 GVY5
686		90-94L	556.00	1.0	441 867 021 GVY5
687	leather	90-94R	547.00	1.0	441 867 022 FVY7
688		90-94L	556.00	1.0	441 867 021 FVY7
929	upper	90-91R	218.30		441 867 120 5AY
930		90-91L	218.30		441 867 119 5AY
931	lwr woodgrain	90-94R	451.90		441 867 410 1WV
932		90-94L	451.90		441 867 409 1WV
689	**Armrest**	90-94R	107.00		441 867 172 A1KY
690		90-94L	107.00		441 867 171 B1KY
	Door trim panel				
	6 rear				
691	cloth	90-94R	436.10	0.7	441 867 222 AVY5
692		90-94L	436.10	0.7	441 867 221 AVY5
693	leather	90-94R	436.10	0.7	441 867 222 CVY7
694		90-94L	436.10	0.7	441 867 221 CVY7
933	upper	90-91R	248.10		441 867 320 5AY
934		90-91L	248.10		441 867 319 5AY
935	lwr woodgrain	90-94R	229.95		441 867 420 1WV
936		90-94L	229.95		441 867 419 1WV
695	**Armrest**	90-94R	107.00		441 867 172 A1KY
696		90-94L	103.90		441 867 171 A1KY
	Qtr trim				
697	7 front upper	90-94R	46.10	0.3	443 867 242 A1KY
698		90-94L	46.10	0.3	443 867 241 A1KY
699	8 rear upper	90-94R	156.50	0.6	441 867 296 A3XG
700		90-94L	156.50	0.6	441 867 295 A3XG
937	**Package tray**	90-94	277.25	1.4	447 863 411 B5FH
	Trim				
938	vent	90-94	4.70		447 863 915 3VF
	Trunk trim				
701	9 side	90-91R	169.40	0.4	441 863 882 8FZ
702		90-91L	164.45	0.4	441 863 881 8FZ
1264		92-94R	164.45	0.4	441 863 882 C8FZ
1265		92-94L	169.40	0.4	441 863 881 B8FZ
703	10 cover	90-94R	45.05	0.4	441 863 476 A8FZ
704		90-94L	45.05	0.4	441 863 475 A8FZ
705	11 rear	90-94B	78.85	0.4	441 863 471 8FZ
939	**Lamp cover**	90-94R	12.25		447 863 508 01C
940		90-94L	12.25		447 863 507 01C
706	**Headliner**	90-94	742.00	5.0	441 867 505 C5VD

Please contact our Product Support Group if you require assistance locating, interpreting or using any information contained in this Estimating Guide. *Toll Free Number: 1-800-426-6867.*