FRONT DOOR (CONT)

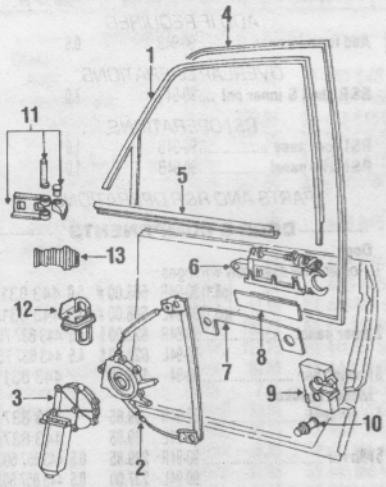

GLASS & HARDWARE

	Glass					
401	AUDI	90-94R	281.95	1.5	443 845 022 G	
402		90-94L	281.95	1.5	443 845 021 G	
403	NAGS	90-94R	215.30	1.5	FD2743GTN	
404		90-94L	215.30	1.5	FD2744GTN	
1434	**Guide channel**	90-94	‡		NOT SERVICED	
405	1 **Window guide**	90-94R	188.20		441 837 440	
406		90-94L	193.85		441 837 439	
407	2 **Regulator**	90-94R	218.40 ¶	1.6	443 837 398 D	
408		90-94L	218.40 ¶	1.6	443 837 397 D	
409	3 **Motor**	90-93R	D ¶	1.6	443 959 802 F	
410		90-93L	D ¶	1.6	443 959 801 F	
	Weatherstrip					
411	4 on body	90-94R	171.05 †	0.5	441 831 722 QP1	
412		90-94L	166.05 †	0.5	441 831 721 QP1	
413	5 inner belt	90-94R	15.25		443 837 480 B	
414		90-94L	15.25		443 837 479 B	
	6 **Handle, outside**					
	w/o heated lock					
415		(p.3) 90-94R	69.15 ¶	1.5	893 837 206 E3FZ	
416		(p.3) 90-94L	69.15 ¶	1.5	893 837 205 E3FZ	
1201	w/heated lock	(p.3) 90-94R	91.25 ¶	1.5	893 837 206 F3FZ	
1202		(p.3) 90-94L	91.25 ¶	1.5	893 837 205 F3FZ	
	Trim plate					
417	7 upper	90-94R	23.25	0.5	893 837 240 E3FZ	
418		90-94L	23.95	0.5	893 837 239 E3FZ	
419	8 lower	90-94	7.05	0.5	893 837 237 E3FZ	
1368	**retainer**	90-94	.67		893 837 109 E	
420	**Handle, inside**	90-94R	26.25	0.5	893 837 020 01C	
421		90-94L	26.25	0.5	893 837 019 01C	
1369	**gasket**	90-94R	1.30		893 837 210 E	
1370		90-94L	1.30		893 837 209 E	
841	**Cable**	90-94R	11.65		443 837 082 C	
842		90-94L	11.65		443 837 081 C	
843	**Lock lever**	90-94R	3.40		443 837 080 F	
844		90-94L	3.40		443 837 079 F	
845	**Lock rod**	90-94R	3.40		443 837 184 C	
846		90-94L	3.40		443 837 183 C	
422	**Cyl & keys**	90-94B	14.95 ¶	1.5	893 837 061 A	
	housing					
423	w/alarm	90-94R	296.55		893 837 064 C	
424		90-94L	296.55		893 837 063 C	
425	9 **Lock**	90-94R	84.00 #	0.5	441 837 016	
426		90-94L	65.20 #	0.5	441 837 015	
847	**gasket**	90-94R	4.25		443 837 064	
848		90-94L	4.25		443 837 063	
849	**Cover**	90-94R	3.90		443 837 350 D	
850		90-94L	3.90		443 837 349 D	
427	**Lock actuator**	90-94	33.95 #	0.5	8A0 862 153	
851	**bracket**	90-94	2.60		443 862 123 A	
852	**Rod**	90-94	2.60		443 862 163 B	
428	10 **Striker**	90-94B	2.95	0.2	441 837 035 C	
429	11 **Hinge assy**	(p.3) 90-94B	36.95	1.0	443 831 401	
430	**pin**	90-94	3.05		443 831 421	
431	**bushing**	90-94	2.55		433 831 441	
432	12 **Check arm**	90-94	28.05	1.0	443 837 249 D	
433	13 **Boot**	90-94	4.70		4A0 959 845 C	

 # After trim panel is removed.
¶ Includes R&I trim panel.Order by code.
‡ Part of inner panel.
† Order by color.

CENTER PILLAR & ROCKER PANEL

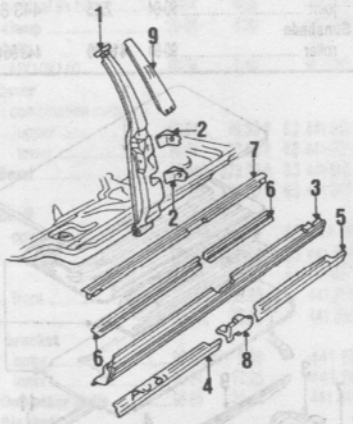

REFINISHING NOTES
Add for stone guard. See Guide To Estimating.

PARTS AND R&R OPERATIONS

CENTER PILLAR & ROCKER

	1 **Pillar**					
	w/o infrared locking system					
438		(p1.0) 90-94R	242.60	s 5.5	441 809 220 A	
439		(p1.0) 90-94L	249.85	s 5.5	441 809 219 A	
	w/infrared locking system					
1205		(p1.0) 90-94R	249.85	s 5.5	441 809 220 B	
1206		(p1.0) 90-94L	242.60	s 5.5	441 809 219 B	
	2 **Hinge & bracket**					
440	upper	90-94	9.50		443 809 946 B	
441	lower	90-94	9.50		443 809 945 B	
	Rocker panel					
442	3 outer	(p1.0) 90-94R	274.00	s 6.0	441 804 758 C	
443		(p1.0) 90-94L	293.65	s 6.0	441 804 757 C	
1435	inner	90-94	¶		NOT SERVICED	
	Plate					
	front floor					
1207	manual trans	90-94	361.20		441 803 061 B	
853	auto trans	90-94	361.20		441 803 061	
854	**Floor pan**	90-91R	645.00		443 804 074 B	
855		90-91L	664.00		443 804 073 B	
1208		92-94R	645.00		4A0 804 074 A	
1209		92-94L	664.00		4A0 804 073	
856	**Front c'member**	90-94	307.45		441 803 163 C	
857	**Seat support**	90-91R	94.70		443 803 174 D	
858		90-91L	94.10		443 803 173 D	
1210		92-94R	94.70		4A0 803 174	
1211		92-94L	94.70		4A0 803 173	
	Scuff plate					
	outer					
444	4 front	90-94R	121.55	0.3	441 853 558 01C	
445		90-94L	121.55	0.3	441 853 557 01C	
446	5 rear	90-94R	100.20	0.3	441 853 758 01C	
447		90-94L	100.20	0.3	441 853 757 01C	
448	6 **retainer**	90-94	27.15		443 857 907 D	
	Scuff plate					
449	7 inner	90-91R	D 20.95 #		443 857 902 01C	
450		90-91L	27.15 #		441 857 905 A01C	
1212		92-94R	27.15 #		441 857 906 A01C	
1213		92-94L	27.15 #		441 857 905 A01C	
451	8 **End support**	90-94R	1.30		441 853 950 C	
452		90-94L	1.30		441 853 949 C	
	9 **Pillar trim**					
	w/o infrared locking system					
453		90-94R	33.85 #	0.4	443 853 290 F01C	
454		90-94L	22.05 #	0.4	443 853 289 F01C	
	w/infrared locking system					
1214		90-94R	26.95 #	0.4	443 853 290 G01C	
1215		90-94L	26.75 #	0.4	443 853 289 G01C	
	gasket					
859	side	90-94	6.75		443 853 497	
860	lower	90-94	6.55		443 853 497 B01C	
861	**bracket**	90-94R	2.55		443 853 588	
862		90-94L	1.85		443 853 587 A	
863	**Insert**	90-94R	2.40		443 837 926	
864		90-94L	2.35		443 837 925	

 # Order by color.
¶ Serviced in floor pan.

HEAT & SOUND INSULATORS

	Cover					
	1 tunnel					

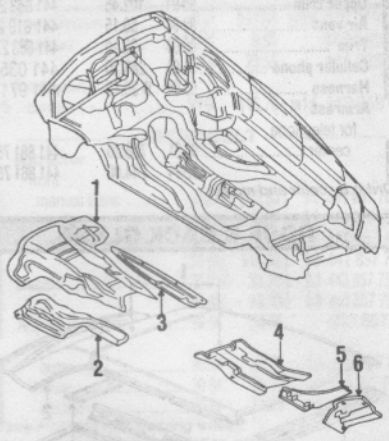

1032	manual transmission	90-94	259.95		441 864 843 B	
1033	automatic trans	90-94	147.80		441 864 843 A	
	2 passengers side, front					
1034	manual trans	90-91	81.05		441 804 162 C	
1216		92-94	79.75		441 804 162 G	
1035	automatic trans	90-94	81.05		441 804 162 F	
	3 drivers side, front					
1036	manual trans	90-91	59.05		441 804 161 F	
1217		92-94	59.75		441 804 161 G	
1037	automatic trans	90-94	60.75		441 804 161 E	
1038	4 **Center floor pan**	90-94	73.15		441 804 165 C	
	Closure panel					
	rear					
1039	5 center	90-94	71.00		443 804 165	
1040	6 at wheel	90-94	61.05		443 804 167	

SEATS & TRACKS

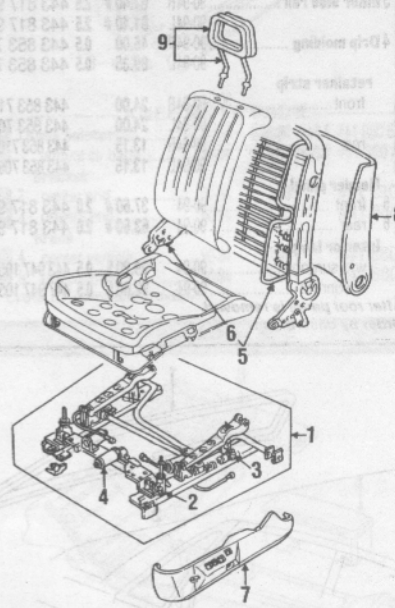

PARTS AND R&R OPERATIONS

TRACKS & COMPONENTS

	Frame assy					
455	w/o electric adjust	90-94R	402.40 #	1.5	447 881 106 Q	
456		90-94L	402.40 #	1.5	447 881 105 Q	
457	1 w/electric adjuster	90-94R	1454.00 #	1.5	447 881 026 AD	
458		90-94L	2108.00 #	1.5	447 881 025 AD	
	Height adjuster					
735	2 front	90-94R	162.10		433 881 390	
736		90-94L	162.10		433 881 389	
737	3 rear	90-94R	162.10		433 881 392	
738		90-94L	162.10		433 881 391	
459	4 **Motor**	90-94	309.30		433 959 761	
	Frame					
876	5 backrest	90-94R	520.00		447 881 050 B	
877		90-94L	520.00		4A0 881 049 A	
878	6 **Motor**	90-94R	460.20		443 959 761 K	
879		90-94L	336.20		4A0 959 761	

Please contact our Product Support Group if you require assistance locating, interpreting or using any information contained in this Estimating Guide. ***Toll Free Number: 1-800-426-6867.***