Dark Elephant				
To VIN X199999	8D9 867 505 H 1RE	6.0		257.20
From VIN X200001	8D9 867 505 S 1RE	6.0		331.00
Dark Pearl				
To VIN X199999	8D9 867 505 H 2RP	6.0		257.20
From VIN X200001	8D9 867 505 S 2RP	6.0		331.00
Ecru Beige				
To VIN X199999	8D9 867 505 H 3SA	6.0		257.20
From VIN X200001	8D9 867 505 S 3SA	6.0		331.00
2000-02				
Dark Elephant	8D9 867 505 S 1RE	6.0		331.00
Dark Pearl	8D9 867 505 S 2RP	6.0		331.00
Ecru Beige	8D9 867 505 S 3SA	6.0		331.00
w/o Sunroof				
1998				
Dark Elephant	8D9 867 505 1RE	5.5		257.20
Dark Pearl	8D9 867 505 2RP	5.5		257.20
Ecru Beige	8D9 867 505 3SA	5.5		257.20
1999				
Dark Elephant				
To VIN X199999	8D9 867 505 1RE	5.5		257.20
From VIN X200001	8D9 867 505 R 1RE	5.5		331.00
Dark Pearl				
To VIN X199999	8D9 867 505 2RP	5.5		257.20
From VIN X200001	8D9 867 505 R 2RP	5.5		331.00
Ecru Beige				
To VIN X199999	8D9 867 505 3SA	5.5		257.20
From VIN X200001	8D9 867 505 R 3SA	5.5		331.00
2000-02				
Dark Elephant	8D9 867 505 R 1RE	5.5		331.00
Dark Pearl	8D9 867 505 R 2RP	5.5		331.00
Ecru Beige	8D9 867 505 R 3SA	5.5		331.00
2 **Clamp (6/Side)**	R/L 8D0 867 549			1.50
3 **Frame, Sunroof Opening**				
1998	8D0 867 561 A 01C			d34.55
1999				
To VIN X199999	8D0 867 561 A 01C			d34.55
From VIN X200001	4B0 867 561 01C			32.30
2000-02	4B0 867 561 01C			32.30
Trim, Upper Rear				
Dark Elephant	8D9 867 839 1EU			32.50
Dark Pearl	8D9 867 839 2EX			32.50
Ecru Beige	8D9 867 839 BQ1			32.50
Cover, Upper Headliner				
Dark Elephant	8D0 867 522 2EQ			1.90
Dark Pearl	8D0 867 522 4ER			1.90
Ecru Beige	8D0 867 522 P21			1.90
4 **Handle, Front Grab**				
1998				
Dark Elephant	R/L 8D0 857 607 2EQ	.2		27.05
Dark Pearl	R/L 8D0 857 607 4ER	.2		27.05
Ecru Beige	R/L 8D0 857 607 P21	.2		17.60
Onyx	R/L 8D0 857 607 1EJ	.2		d25.70
1999				
Dark Elephant				
To VIN X199999	R/L 8D0 857 607 2EQ	.2		27.05
From VIN X200001	R/L 8D0 857 607 F 2EQ	.2		27.05
Dark Pearl				
To VIN X199999	R/L 8D0 857 607 4ER	.2		27.05
From VIN X200001	R/L 8D0 857 607 F 4ER	.2		27.05
Ecru Beige				
To VIN X199999	R/L 8D0 857 607 P21	.2		17.60
From VIN X200001	R/L 8D0 857 607 F P21	.2		27.05
Onyx				
To VIN X199999	R/L 8D0 857 607 1EJ	.2		d25.70
From VIN X200001	R/L 8D0 857 607 F 1EJ	.2		27.05
2000-02				
Dark Elephant	R/L 8D0 857 607 F 2EQ	.2		27.05
Dark Pearl	R/L 8D0 857 607 F 4ER	.2		27.05
Ecru Beige	R/L 8D0 857 607 F P21	.2		27.05
Onyx	R/L 8D0 857 607 F 1EJ	.2		27.05
5 **Handle, Rear Grab**				
1998				
Dark Elephant	R 8D0 857 608 2EQ	.2		27.05
	L 8D0 857 607 A 2EQ	.2		27.05
Dark Pearl	R 8D0 857 608 4ER	.2		27.05
	L 8D0 857 607 A 4ER	.2		27.05
Ecru Beige	R 8D0 857 608 P21	.2		27.05
	L 8D0 857 607 A P21	.2		27.05
Onyx	R 8D0 857 608 1EJ	.2		27.05
	L 8D0 857 607 A 1EJ	.2		27.05
1999				
Dark Elephant				
To VIN X199999	R 8D0 857 608 2EQ	.2		27.05
	L 8D0 857 607 A 2EQ	.2		27.05
From VIN X200001	R 8D0 857 608 C 2EQ	.2		27.05
	L 8D0 857 607 G 2EQ	.2		27.05
Dark Pearl				
To VIN X199999	R 8D0 857 608 4ER	.2		27.05
	L 8D0 857 607 A 4ER	.2		27.05
From VIN X200001	R 8D0 857 608 C 4ER	.2		27.05
	L 8D0 857 607 G 4ER	.2		27.05
Ecru Beige				
To VIN X199999	R 8D0 857 608 P21	.2		27.05
	L 8D0 857 607 A P21	.2		27.05
From VIN X200001	R 8D0 857 608 C P21	.2		27.05
	L 8D0 857 607 G P21	.2		27.05
Onyx	8D0 857 608 1EJ	.2		27.05
To VIN X199999	R 8D0 857 608 1EJ	.2		27.05
	L 8D0 857 607 A 1EJ	.2		27.05
From VIN X200001	R 8D0 857 608 C 1EJ	.2		27.05
	L 8D0 857 607 G 1EJ	.2		27.05
2000-02				
Dark Elephant	R 8D0 857 608 C 2EQ	.2		27.05
	L 8D0 857 607 G 2EQ	.2		27.05
Dark Pearl	R 8D0 857 608 C 4ER	.2		27.05
	L 8D0 857 607 G 4ER	.2		27.05
Ecru Beige	R 8D0 857 608 C P21	.2		27.05
	L 8D0 857 607 G P21	.2		27.05
Onyx	R 8D0 857 608 C 1EJ	.2		27.05
	L 8D0 857 607 G 1EJ	.2		27.05
Lamp, Front Dome¶				
6 w/Sunroof				
Dark Elephant	8D0 947 106 1EU	.3		54.30
Dark Pearl	8D0 947 106 2EX	.3		54.30
Ecru Beige	8D0 947 106 BQ1	.3		54.30
Onyx	8D0 947 106 6DP	.3		54.30
7 w/o Sunroof				
Dark Elephant	8D0 947 111 H 1EU	.3		49.90
Dark Pearl	8D0 947 111 H 2EX	.3		49.90
Ecru Beige	8D0 947 111 H BQ1	.3		54.30
Onyx	8D0 947 111 H 6DP	.3		49.50
¶Order by Application				
Lens, Dome Lamp				
8 w/Sunroof	8D0 947 125 A	.2		12.70
9 w/o Sunroof	8D0 947 125	.2		12.70
10 **Knob, Lamp**				
Dark Elephant	8D0 959 513 1EU	.2		2.90
Dark Pearl	8D0 959 513 2EX	.2		2.90
Ecru Beige	8D0 959 513 BQ1	.2		2.90
Onyx	8D0 959 513 6DP	.2		2.90
11 **Potentiometer**	8D0 959 613 A			71.00
12 **Bulb**	N 017 723 2			1.70
13 **Bulb**	R/L N 900 349 01			1.75
14 **Lamp, Reading**				
1998	R/L 8D9 947 112 L39	.3		30.95
1999				
To VIN X199999	R 8D9 947 112 L39	.3		30.95
	L 8D9 947 111 L39	.3		30.95
From VIN X200001				
Beige	8D0 947 111 AA BQ1	.3		73.80
Black	8D0 947 111 AA 6PS	.3		73.80
Dark Gray	8D0 947 111 AA 1EU	.3		73.80
Light Gray	8D0 947 111 AA 2EX	.3		73.80
2000-02				
Beige	8D0 947 111 AA BQ1	.3		73.80
Black	8D0 947 111 AA 6PS	.3		73.80
Dark Gray	8D0 947 111 AA 1EU	.3		73.80
Light Gray	8D0 947 111 AA 2EX	.3		73.80
15 **Bulb**				
1998	R/L N 017 753 2			1.30
1999				
To VIN X199999	R/L N 017 753 2			1.30
From VIN X200001	R/L N 900 349 01			1.75
2000-02	R/L N 900 349 01			1.75

SUNROOF

R&I Sliding Panel 1.5
O/H Sunroof Assy (Includes R&I) ..... #3.5
#w/Headliner Removed, Includes Necessary Adjustments

NOTE: All Parts in this section are included in overhaul unless noted otherwise.

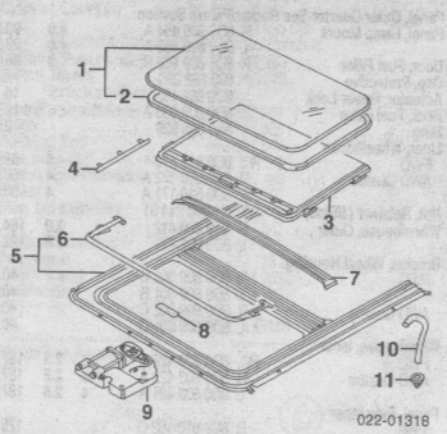

1 **Panel Assy, Sliding**				
1996-98	8D0 877 071		1.5	468.40
1999				
To VIN X199999	8D0 877 071		1.5	468.40
From VIN X200001	8D0 877 071 A		1.5	347.64
2000-02	8D0 877 071 A		1.5	347.64
2 **Gasket, Panel¶**				
1996-98	8D0 877 297 A			67.55
1999				
To VIN X199999	8D0 877 297 A			67.55
From VIN X200001	8D0 877 297 D			69.10
2000-02	8D0 877 297 D			69.10
¶Included w/Sliding Panel Assy				
3 **Frame, Upper**				
1996-97				
Ecru Beige	8D0 877 255 C P68			219.55
Titan Gray	8D0 877 255 C E86			292.70
1998				
Dark Elephant	8D0 877 255 C 1RE			292.70
Dark Pearl	8D0 877 255 C 2RP			249.60
Ecru Beige	8D0 877 255 C 3SA			249.60
Onyx	8D0 877 255 C 4SL			292.70
1999				
Dark Elephant				
To VIN X199999	8D0 877 255 C 1RE			292.70
From VIN X200001	8D0 877 255 D 1RE			284.45
Dark Pearl				
To VIN X199999	8D0 877 255 C 2RP			249.60
From VIN X200001	8D0 877 255 D 2RP			292.70
Ecru Beige				
To VIN X199999	8D0 877 255 C 3SA			249.60
From VIN X200001	8D0 877 255 D 3SA			292.70
Onyx				
To VIN X199999	8D0 877 255 C 4SL			292.70
From VIN X200001	8D0 877 255 D 4SL			292.70
2000-02				
Dark Elephant	8D0 877 255 D 1RE			284.45
Dark Pearl	8D0 877 255 D 2RP			292.70
Ecru Beige	8D0 877 255 D 3SA			292.70
Onyx	8D0 877 255 D 4SL			292.70
4 **Trim, Side¶**				
Sedan				
Upper	R 8D0 877 792 01C			2.60
	L 8D0 877 791 01C			2.60
Lower	R 8D0 877 794 01C			2.60
	L 8D0 877 793 01C			2.60
Wagon				
Upper	R 8D9 877 792 01C			2.60
	L 8D9 877 791 01C			2.60
Lower	R 8D9 877 794 01C			2.60
	L 8D9 877 793 01C			2.60
¶Order by Application				
5 **Frame Assy**				
Sedan				
1996-98	8D5 877 049		#3.5	468.40
1999				
To VIN X199999	8D5 877 049		#3.5	468.40
From VIN X200001	8D5 877 049 A		#3.5	469.49
2000-02	8D5 877 049 A		#3.5	469.49
Wagon				
1998	8D9 877 049 B		#3.5	468.40
1999				
To VIN X199999	8D9 877 049 B		#3.5	468.40
From VIN X200001	8D9 877 049 C		#3.5	841.00
2000-02	8D9 877 049 C		#3.5	841.00
#w/Headliner Removed, Includes Necessary Adjustments				
6 **Deflector, Air**				
1996-98	8D9 877 651			93.70
1999				
Sedan				
To VIN X199999	8D9 877 651			93.70
From VIN X200001	8D9 877 651 D			93.70
Wagon¶				
To VIN X199999	8D9 877 651 A			93.70
From VIN X200001	8D9 877 651 E			93.70
2000-02				
Sedan	8D9 877 651 D			93.70
Wagon¶	8D9 877 651 E			93.70
¶Included w/Frame Assy				
7 **Channel, Rain**				
Sedan				
1996-98	8D0 877 633			32.90
1999				
To VIN X199999	8D0 877 633			32.90
From VIN X200001	8D0 877 633 B			32.90
2000-02	8D0 877 633 B			32.90
8 **Cover, Center**				
Sedan	8D0 877 381			5.90
Wagon				
Anthracite	8D0 877 847 2PR			35.45
Dark Elephant	8D0 877 847 1RE			35.45
Ecru Beige	8D0 877 847 3SA			35.45
9 **Motor, Sunroof**	96-98 8D0 959 591		1.0	435.10
	99-02 8D0 959 591 A		1.0	435.10
10 **Hose, Drain¶ (4)**	4A9 877 233			10.55
¶Cut to Fit				
11 **Tube, Drain**				
Front (2)	4D0 877 242 B			3.75
Rear (2)	8D0 877 242			2.75

BACK WINDOW

Use Procedure Explanation 19 with the following text.

R&I Back Window Glass ..... #3.4
#Includes Clean Up Old Adhesive as Necessary

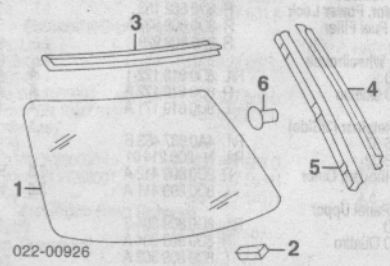

1 **Glass, Back Window**				
Audi (Heated/Green Tint)¶	8D5 845 501 L		#3.0	237.10
NAGS (Green)	FB05595GTN		#3.0	879.45
¶Order by Application				
#Includes Clean Up Old Adhesive as Necessary				
2 **Spacer, Lower**	R/L 8D5 845 631			1.90
3 **Mldg, Upper Reveal**	8D5 845 533 D 01C			9.50
4 **Mldg, Side Reveal**				
1996				
To 8-95	R 8D5 854 322 01C			10.30
	L 8D5 854 321 01C			10.30
From 9-95	R 8D5 854 322 B 01C			8.65
	L 8D5 854 321 B 01C			8.65
1997-02	R 8D5 854 322 B 01C			8.65
	L 8D5 854 321 B 01C			8.65
5 **Strip, Clamping**	R 8D5 845 346 A			13.85
	L 8D5 845 345 A			13.85
Insert, Moulding (Satin Black)				
1996				