FRONT FENDER Cont'd

Refinish Upper Fender Moulding	R/L	.3	
Refinish Lower Fender Moulding	R/L	.3	
R&I Fender Assy	R/L	#3.3	

#Includes R&I Front Bumper Assy, R&I/R&R Park/Signal/Side Marker Lamp, R&I Combination Lamp & R&R Fender Liner

NOTE: Audi advises that Side Moulding is non-reusable.

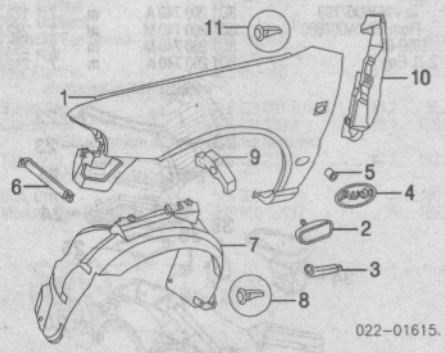

1 **Fender**					
1996	R/L	8D0 821 106-5		#3.8	294.85
1997	R	8D0 821 106 A		#3.8	294.85
	L	8D0 821 105 A		#3.8	294.85
1998	R	8D0 821 106 J		#3.8	231.40
	L	8D0 821 105 K		#3.8	231.40
1999					
To VIN X199999	R	8D0 821 106 J		#3.8	231.40
	L	8D0 821 105 K		#3.8	231.40
From VIN X200001	R	8D0 821 106 M		#3.8	278.65
	L	8D0 821 105 M		#3.8	278.65
2000-02	R	8D0 821 106 M		#3.8	278.65
	L	8D0 821 105 M		#3.8	278.65

#Includes R&I Front Bumper Assy, R&I/R&R Park/Signal/Side Marker Lamp, R&I Combination Lamp & R&R Fender Liner

2 **Mldg, Upper Fender (Adhesive) (P)**					
1997-98	R	8D0 853 974	GRU	.2	13.45
	L	8D0 853 973	GRU	.2	13.45
1999					
To VIN X199999	R	8D0 853 974	GRU	.2	13.45
	L	8D0 853 973	GRU	.2	13.45
From VIN X200001	R	8D0 853 974 B	GRU	.2	13.45
	L	8D0 853 973 B	GRU	.2	13.45
2000-02	R	8D0 853 974 B	GRU	.2	13.45
	L	8D0 853 973 B	GRU	.2	13.45
3 **Mldg, Lower Fender**					
1996-97					
To 7-96	R	8D0 853 580 A	01C	.4	3.40
	L	8D0 853 579 A	01C	.4	3.40
From 8-96	R	8D0 853 580 D	01C	.4	5.70
	L	8D0 853 579 D	01C	.4	5.70
1998	R	8D0 853 580 D	01C	.4	5.70
	L	8D0 853 579 D	01C	.4	5.70
1999					
To VIN X199999	R	8D0 853 580 D	01C	.4	5.70
	L	8D0 853 579 D	01C	.4	5.70
From VIN X200001	R	8D0 853 580 F	01C	.4	5.70
	L	8D0 853 579 F	01C	.4	5.70
2000-02					
A4	00-01 R	8D0 853 580 F	01C	.4	5.70
	L	8D0 853 579 F	01C	.4	5.70
S4 (P)	R	8D0 853 580 C	GRU	.4	23.45
	L	8D0 853 579 C	GRU	.4	23.45
(P) Paint to Match					
4 **Emblem, Audi**	R/L	8D0 853 621 B	2ZZ	.2	14.10
5 **Clip, Emblem**	R/L	8D0 853 622			.58
6 **Brkt, Front Fender**					
1996-97	R/L	8D0 821 136-5			4.10
1998					
To VIN W175627	R/L	8D0 821 136-5			4.10
From VIN W175628	R	8D0 821 136			4.10
	L	8D0 821 135 A			4.10
1999					
To VIN X199999	R	8D0 821 136			4.10
	L	8D0 821 135 A			4.10
From VIN X200001	R	8D0 821 136 B			4.10
	L	8D0 821 135 D			4.10
2000-02	R	8D0 821 136 B			4.10
	L	8D0 821 135 D			4.10
7 **Liner, Fender**					
A4					
1996-98	R	8D0 821 172 D		.5	35.95
	L	8D0 821 171 B		.5	35.95
1999					
To VIN X199999	R	8D0 821 172 D		.5	35.95
	L	8D0 821 171 B		.5	35.95
From VIN X200001	R	8D0 821 172 F		.5	35.95
	L	8D0 821 171 F		.5	35.95
2000-01	R	8D0 821 172 F		.5	35.95
	L	8D0 821 171 F		.5	35.95
S4	R	8D0 821 172 G		.5	35.95
	L	8D0 821 171 G		.5	35.95
8 **Nut, Speed¶**	R/L	N 908 214 01			.58
¶As Required					
9 **Seal, Fender Liner**	R/L	8D0 821 197			3.80
10 **Plate, End**	R/L	8D0 821 112-1			28.85
11 **Nut, Expanding (2/Side)**	R/L	N 908 214 01			.58

UNDERHOOD DIMENSIONS

1996-01

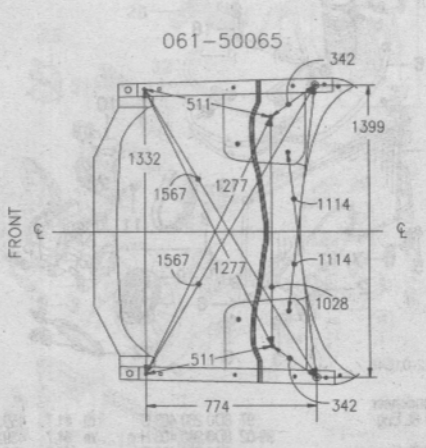

2002

Information not available at time of publication.

FRONT INNER STRUCTURE

Use Procedure Explanations 8 and 28 with the following text.

FRONT

Add to R&R Front Support

To R&R Base Model Mechanical Components	m	#1.0	
#Includes R&I/R&R A/C Condenser & Disconnect & Connect A/C Lines			
To Aim Lamps		.4	
Evacuate & Recharge System	m	1.4	
Recover Refrigerant	m	.3	

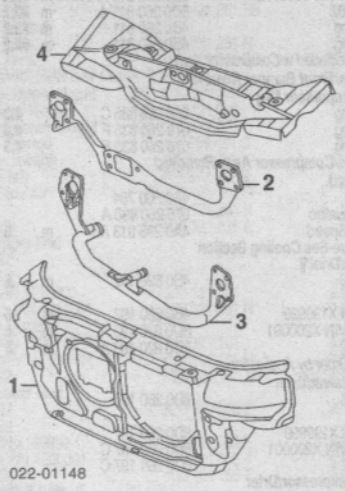

1 **Support, Front¶**				
A4				
4 Cyl	8D0 805 594 AN		#5.1	253.70
6 Cyl	8D0 805 594 AR		#5.1	253.70
S4	8D0 805 594 AJ		#5.1	253.70
¶Order by Application				
#Includes R&I/R&R Headlamp Assemblies, Hood Lower Latch, Air Intake Manifold, Impact Absorbers, Radiator, Cooling Fans & Motors as an Assy, Disconnect & Connect A/C Lines, Wiring & Hood Release Cable as Necessary				
2 **Crossmember, Front**				
6 Cyl				
A4	8D0 805 851 F			61.15
S4	8D0 805 851 G			61.15
3 **Tube, Engine Cross**				
4 Cyl	8D0 199 521 BA			210.20
4 **Crossmember, Strut Mount**				
1996-98	8D1 806 603 G			279.45
1999				
To VIN X199999	8D1 806 603 G			279.45
From VIN X200001	8D1 806 603 G			279.45
2000-02	8D1 806 603 G			279.45

SIDE

Refinish Apron Assy	R/L	1.5	
Refinish Side Front Rail	R/L	.6	

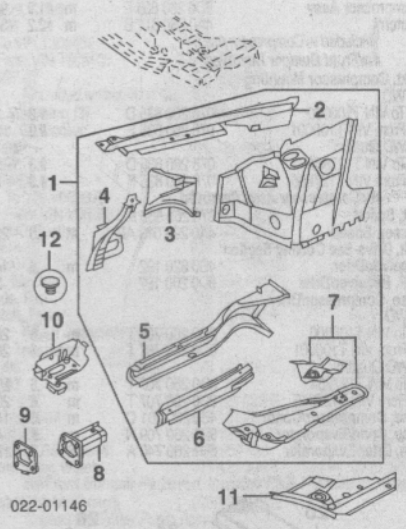

1 **Apron Assy**	R	8D0 809 102 D	s	14.0	668.00
	L	8D0 809 101 K	s	14.0	668.00
2 **Plate, Filler¶**	R	8D0 805 308 A	s		252.70
	L	8D0 805 307 A	s		252.70
3 **Panel, Mounting¶**	R/L	8D0 809 120-19	s		66.60
4 **Support, Front¶**	R	8D0 805 870 D	s		33.90
	L	8D0 805 869 C	s		33.90
5 **Rail, Front Side¶**	R/L	8D0 803 104-3	s	#10.0	190.35
6 **Plate, Rail Cover¶**	R	8D0 802 158 A	s	#10.0	17.75
	L	8D0 802 157 A	s	#10.0	17.75
#Includes R&R Rail Extension					
7 **Rail, Rear Side¶**	R	8D0 803 110 A	s	6.0	258.45
	L	8D0 803 109 A	s	6.0	258.45
¶Included w/Apron Assy					
8 **Rail, Extension**	R	8D0 803 104 A	s	#3.0	103.05
	L	8D0 803 103 A	s	#3.0	103.05
#Included in R&R Front Side Rail					
9 **Mount, Impact Absorber**	R/L	8D0 805 748-7			9.15
10 **Reinf, Rail**					
1996-98	R/L	8D0 803 118-7	s		56.65
1999					
To VIN X199999	R/L	8D0 803 118-7	s		56.65
From VIN X200001	R	8D0 803 118 A	s		56.65
	L	8D0 803 117	s		56.65
2000-02	R	8D0 803 118 A	s		56.65
	L	8D0 803 117	s		56.65
11 **Plate, Mounting**	R	8D0 802 172 C			64.20
	L	8D0 802 171 C			65.10
12 **Plug, Side Rail**	R/L	893 803 593 A			1.50

SUB-FRAME

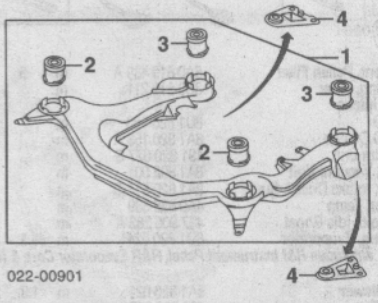

1 **Sub-Frame Assy¶**				
1.8L Eng				
Man Trans	8D0 399 313 BA	m	#2.5	620.00
Auto Trans	8D0 399 313 AM	m	#2.5	620.00
2.7L Eng	4B0 399 313 BL	m	#2.5	456.00
2.8L Eng	4B0 399 313 CE	m	#2.5	456.00
#w/Necessary Bolted Parts Removed, Not Included in Suspension O/H, Includes Support Engine				
2 **Mount, Front Rubber¶ (a)**	R/L	8D0 399 415 D		31.35
3 **Mount, Rear Rubber¶ (a)**	R/L	8D0 399 419 C		31.35
¶Order by Application				
(a) Included w/Sub-Frame Assy				
4 **Support, Rear**	R	8D0 399 542 B		19.05
	L	8D0 399 541 B		19.05

ELECTRICAL COMPONENTS

Illustration Located in Next Column

1 **Module, Eng Control**
FWD

Labor Times Shown are for Replacement with New OEM Undamaged Parts on New Undamaged Vehicles.
Comments or suggestions? Need assistance? Call 1-800-854-7030 or 858-578-6550. Ext. 8220. Fax 1-888-256-7969 or 858-549-0629.